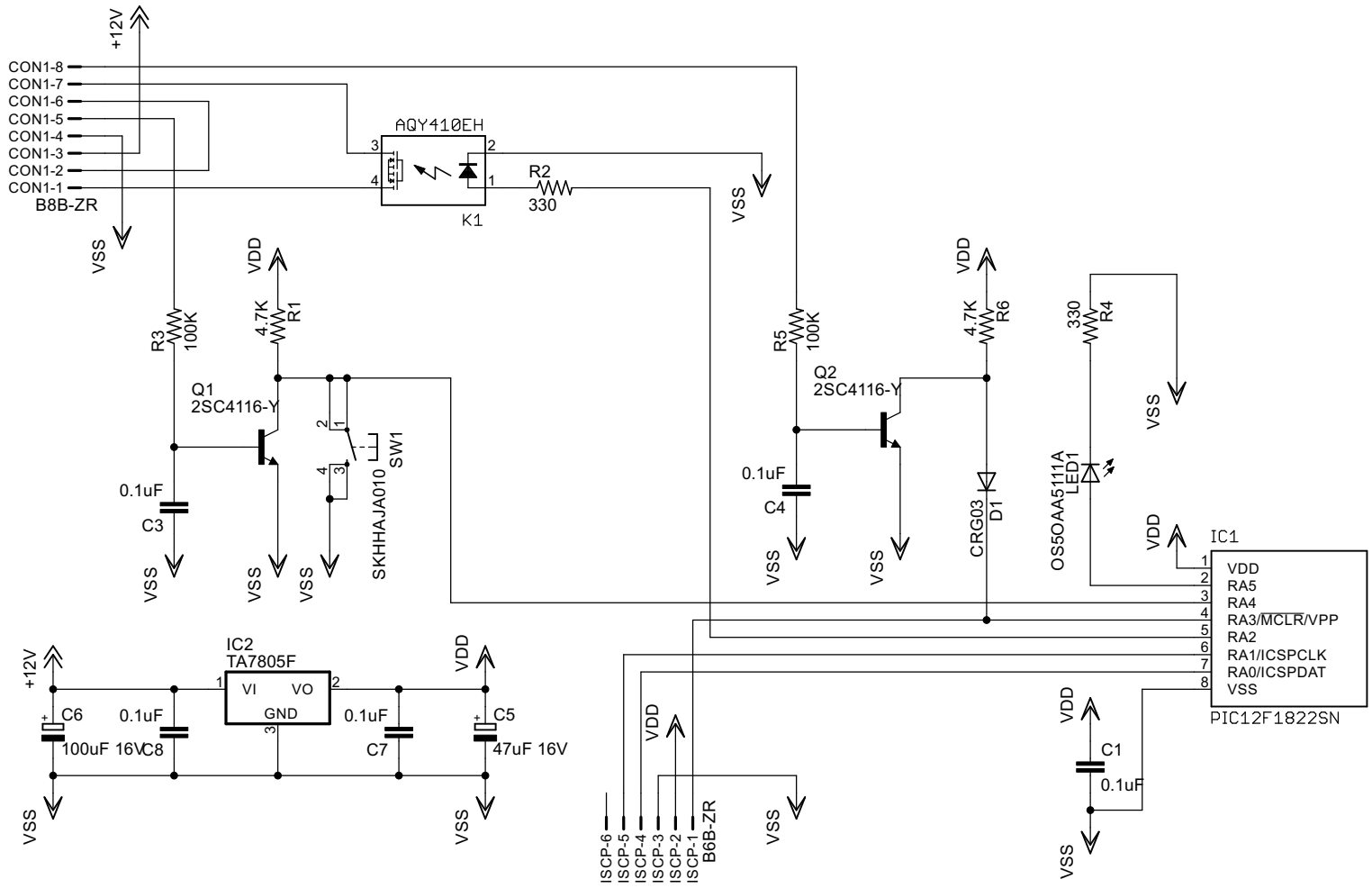
+12V
CON1-8
CON1-7
CON1-6
CON1-5
CON1-4
CON1-3
CON1-2
CON1-1
B8B-ZR
VSS
AQY410EH
K1
R2
330
VDD
R3
100K
4.7K
R1
Q1
2SC4116-Y
0.1uF
C3
SW1
SKHHAJA010
R5
100K
Q2
2SC4116-Y
C4
4.7K
R6
CRG03
D1
330
R4
OS5OAA5111A
LED1
IC1
VDD
RA5
RA4
RA3/MCLR/VPP
RA2
RA1/ICSPCLK
RA0/ICSPDAT
VSS
PIC12F1822SN
IC2
TA7805F
VI
VO
GND
C6
100uF 16V
C8
C7
C5
47uF 16V
C1
ISCP-6
ISCP-5
ISCP-4
ISCP-3
ISCP-2
ISCP-1
B6B-ZR