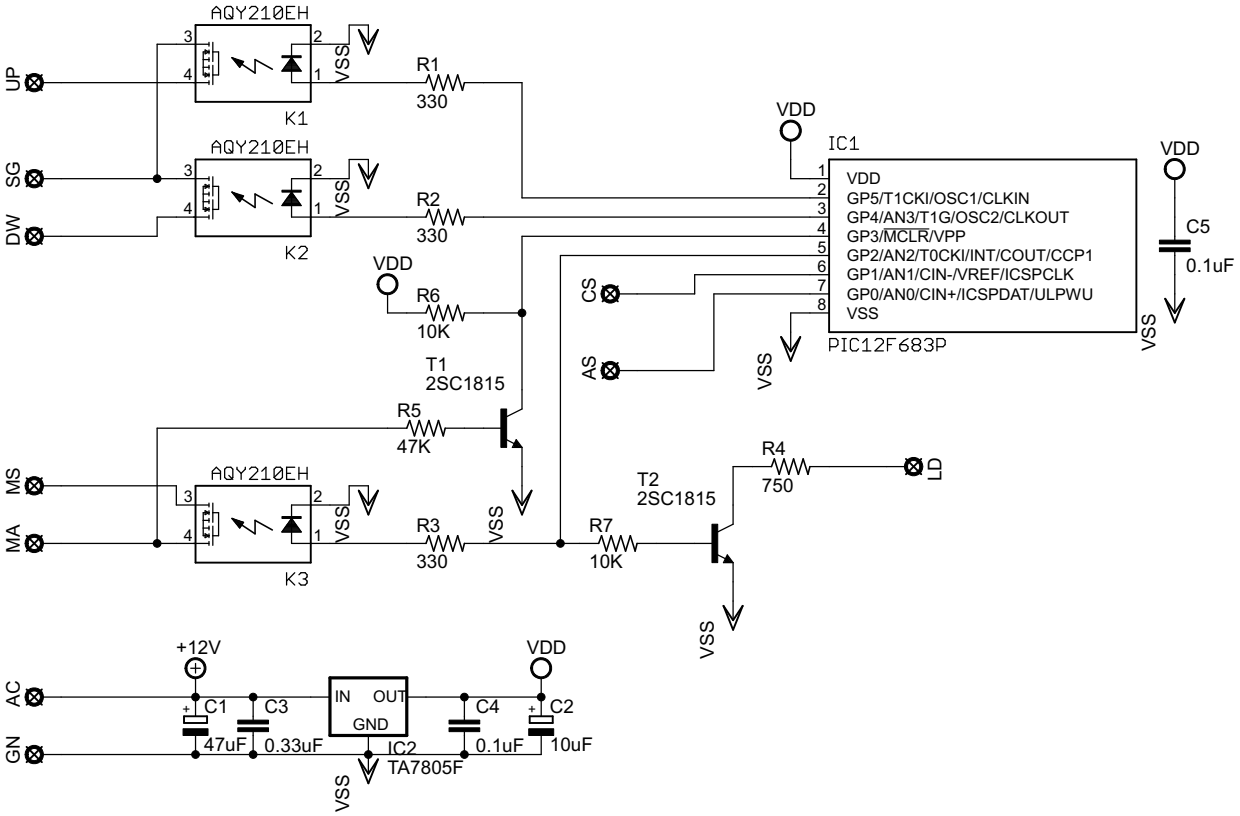
AQY210EH
K1
K2
K3
UP
SG
DW
MS
MA
R1
330
R2
330
R3
330
R4
750
R5
47K
R6
10K
R7
10K
T1
2SC1815
T2
2SC1815
VDD
VSS
IC1
VDD
GP5/T1CKI/OSC1/CLKIN
GP4/AN3/T1G/OSC2/CLKOUT
GP3/MCLR/VPP
GP2/AN2/T0CKI/INT/COUT/CCP1
GP1/AN1/CIN-/VREF/ICSPCLK
GP0/AN0/CIN+/ICSPDAT/ULPWU
VSS
PIC12F683P
C5
0.1uF
CS
AS
LD
+12V
AC
GN
C1
47uF
C3
0.33uF
IN
OUT
GND
IC2
TA7805F
C4
0.1uF
C2
10uF